Product guide

1.5 Tonne Feeder Trailer

Fifty per cent more feed on wheels — 1.5 tonnes of pellets, up to 700 birds a week.

Who it's for

The larger bulk feeder for bigger pasture operations. Same weather protection and waste-cutting gates as the 1 tonne, with fifty per cent more capacity and a 3.6m trough — a week's feed for around 700 birds, and fewer refill runs.

Specifications

Capacity	1.5 tonnes feed · up to 700 birds/ week
Chassis	Heavy-duty galvanised steel
Wheels	2x all-terrain (235/75R15LT)
Trough	3.6m length
Feeding	Dual weather-veranda troughs
Gates	Adjustable flow gates
Guards	Feed-trough guards stop fouling
Lid	Wide top-fill, lever handle
Assembly	Turnkey, pre-assembled

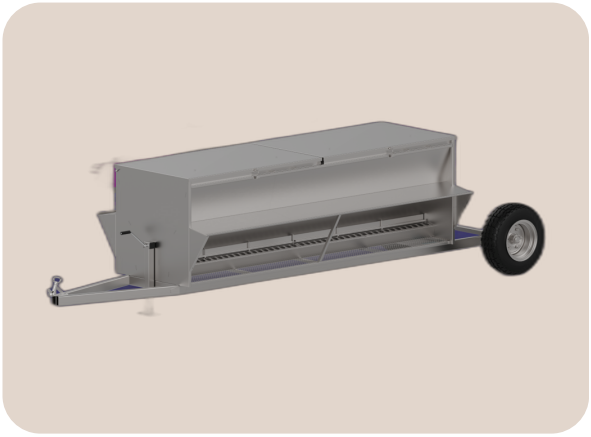

Build the system around it

Feed is a third of the mobile setup — housing and water move too. Owners often pair it with:

Matching chicken trailer
Mobile housing that moves to fresh ground with the feed.

Standard IBC Trailer
1,000L of water alongside the feed run.

Nipple drinker station
Clean water on tap wherever the flock grazes.

Add-ons

Feed-trough lid / cover · ramp · custom branding logo

Working out your feed run? Tell us your flock.

hello@tinkera.com.au · tinkera.com.au/products/chicken-feeders — Oliver reads everything.